Annual Servicing Requirement

To maintain optimum efficiency, annually cleaning is recommended.

1. Isolate the heating system and close both of the two isolating valves. Prepare a suitable bucket to collect spillage.
2. Unscrew the knurled moulding at the top of the filter and withdraw the magnetic bar.

CAUTION:

The bar is a very powerful 12,000 gauss magnet. Keep away from personnel with heart pacemaker, any sensitive electronic devices, storage media or magnetic bank cards.

3. Drain the filter chamber into the bucket using the drain-off valve (e)
4. Use the castellated wrench (s) supplied (or a strap wrench) to loosen the lower body (d) of the filter chamber. Unscrew the filter body fully, clean the body (d), the plastic filter (i) and the magnet cover (c) using hot, soapy water, and rinse with fresh water.
5. Re-assemble the body (d) to the upper section (b), taking care to fit the plastic mesh filter (i) centrally inside body (d), and O-ring (f) onto the recess above the female threaded section of body (d). Fully hand-tighten the lower body (d) to upper body (b). Ensure drain-off valve is closed.
6. Partly open the inlet valve (according to flow direction arrow on rotating joint (k)) and the brass air vent bleed screw, until all air is removed. Close bleed screw, then fully open inlet and outlet valves and check for leaks.
7. Start the heating system.

WARNING: Please observe the safety instructions provided in this documents. This filter contains a strong magnet . Care and attention should be taken at all times during installation and servicing. Do not place the magnetic core on any ferrous surfaces or near ferrous items.

Chemical dosing:

1. Isolate the boiler and close both isolating valves. Release air pressure by opening the Top Air Bleed valve. Prepare a suitable bucket to collect spillage.
2. Drain the filter fully via drain-off valve (e).
3. Unscrew and remove filter body (d) as per 4. above. Fill body (d) with water treatment chemical (capacity 300ml). Re-assemble body (d) to body (b) as per 5. Above.
4. Re-connect the filter to the heating system as per 6. above.
5. Run the system for approximately 5 minutes to disperse chemical additive into system. Repeat 1. - 5. if necessary to add any further water treatment chemical into the system.

Attention: Do not allow chemicals to remain static in the filter for long periods.

1.6. Technical Information

Filter Type	Suitable for Heat Pump & Central Heating Systems
Max. magnetic induction	12,000 Gauss
Filter volume	120 ml
Maximum temperature	120°C
Maximum pressure	12 bars
Maximum flow 1 Kpa (l/m)	15 l
Maximum absorption capaity	115 g
Strainer density	300 µm
Magnet diameter	14.5 mm
Mass	596 g (without valves)
Dimensions	147mmx120mm

BO MAG-1 Magnetic Filter

User Manual

Parts:

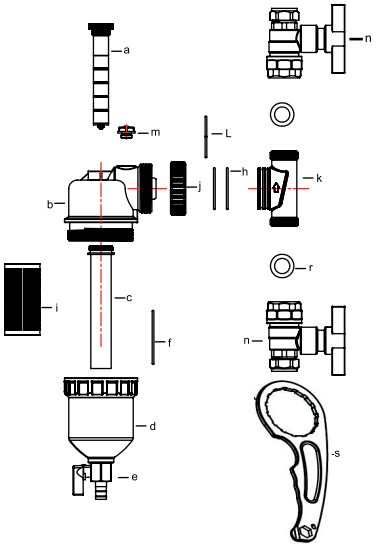

a.Magnetic bar	b.Filter body	c.Cleaning cover
d.Filter body	e.Drain-off valve	f.O ring
j.Colour cap	h.O ring	i.Plastic filter
k.Rotating joint	I.Snap ring	m.Air-vent
n.22mm isolation valve	R.Shim	S.Spanner

Trouble shooting and problem solving

Problem 1: Water is leaking from the filter
Solution: Turn off the system, close the isolating valves. Perform the following checks:
a. Check all seals for location and condition.
b. Check the isolating valve nuts to ensure they are fully tightened.
c. Check the converter locking collar is firmly tightened and not cross threaded.
Problem 2: Poor flow through filter
Solution: Clean the filter when reduced flow is noted.

Installation Instructions:

Only a competent person such as a qualified heating engineer should install the device.

1. Locate a suitable site for the filter to allow access and servicing. Return pipe is recommended, do not fit it between the boiler and the overflow on the open vented systems

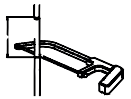

2. Release and drain the heating system pressure

3. Mark the pipe, using a suitable tool to cut 190mm out of the marked section and remove burrs.

4. Fit the isolating valves provided onto both inlet and outlet pipes.

5. Introduce the diverter, ensuring the arrow direction follows the heating system flow. Fit the diverter using the provided flat washers, and tighten the inner nuts fully. After that, tighten the outer compression nuts on valves to ensure a watertight seal.

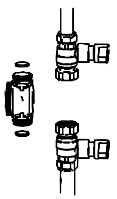

6. Fit the filter body to the diverter and hand tighten the locking collar (Do not over tighten).
The Filter body must be installed vertically.
This filter's magnetic bar is removable.

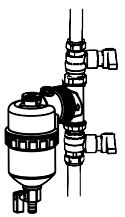

7. Open the isolation valves and turn on heating system.
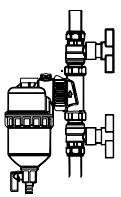
8. Vent as required by using the Top Air Bleed Valve.